Right Side - Toshiba PSPCDC-03H00C User Manual

User manual

1
2
3
4
5
6
7
8
9
10
11
12
13
14
15
Table Of Contents
16
17

18
19
20
21
22
23
24
25
26
27
28
29
30
31
32
33
34
35
36
37
38
39
40
41
42
43
44
45
46
47
48
49
50
51
52
53
54
55
56
57
58
59
60
61
62
63
64
65
66
67

68
69
70
71
72
73
74
75
76
77
78
79
80
81
82
83
84
85
86
87
88
89
90
91
92
93
94
95
96
97
98
99
100
101
102
103
104
105
106
107
108
109
110
111
112
113
114
115
116
117

118
119
120
121
122
123
124
125
126
127
128
129
130
131
132
133
134
135
136
137
138
139
140
141
142
143
144
145
146
147
148
149
150
151
152
153
154
155
156
157
158
159
160
161
162
163
164
165
166
167

168
169
170
171
172
173
174
175
176
177
178
179
180
181
182
183
184
185

•

Table of Contents

•

Troubleshooting

-

Bookmarks

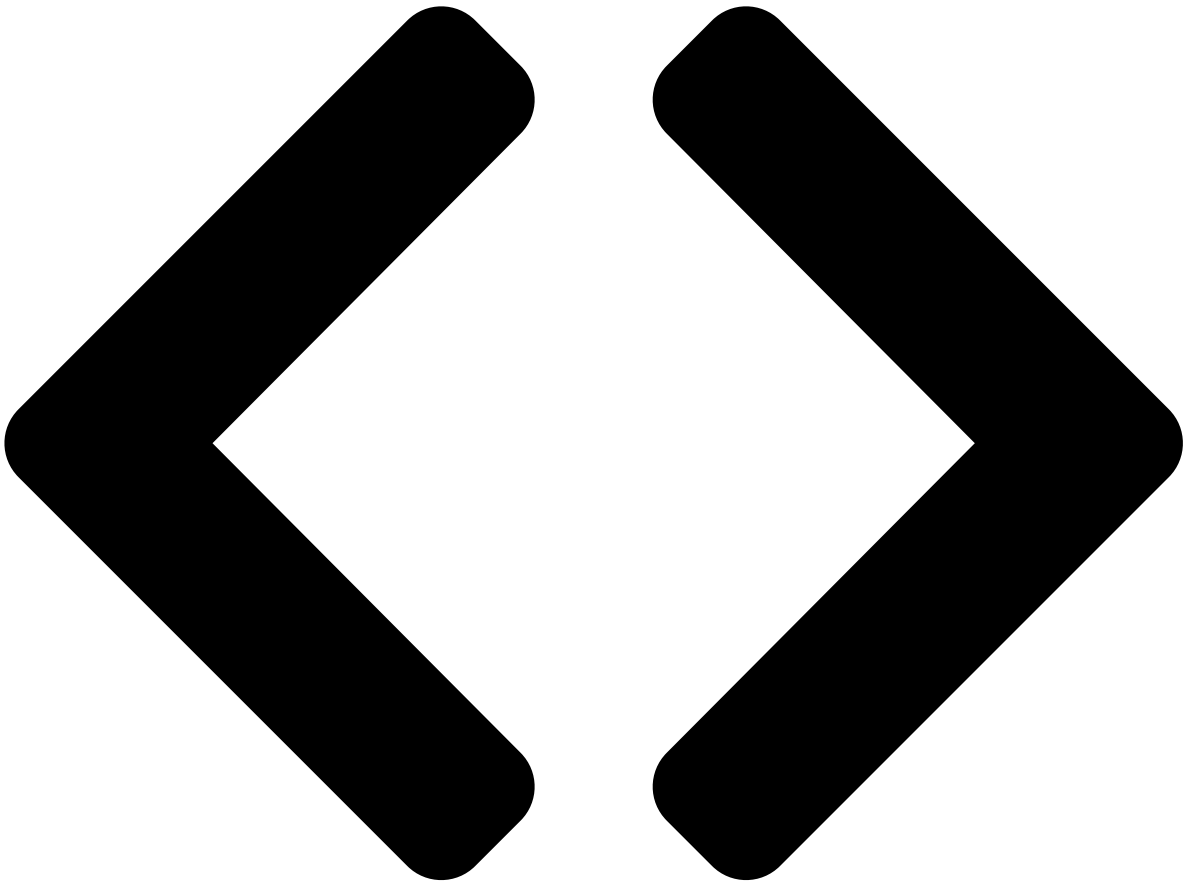

LAN Jack

i.LINK (IEEE1394a) Port

Right side

The following figure shows the computer's right side.

* The figure shows Modem Jack.

ODD Indicator

Eject Button

Security Lock

Universal Serial Bus

(USB 2.0) ports

Modem Jack

User's Manual

This jack lets you connect to a LAN. The adaptor has built-in support for Fast Ethernet LAN or Giga bit Ethernet.(Depend on the model you purchased). Refer to Chapter 4, *Basics, for details.*

This port allows you to connect an external device, such as a digital video camera, for highspeed data transfer. (Provided with some models)

USB

Modem Jack or

Ports

FM Antenna

Jack*

The right side of the computer

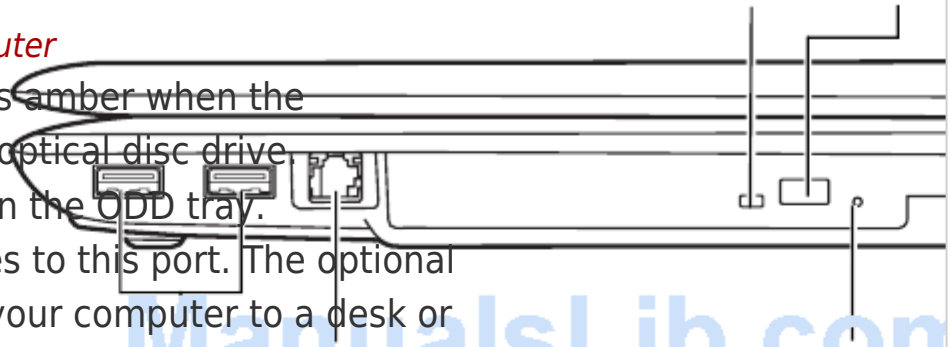

The ODD indicator glows amber when the computer accesses the optical disc drive.

Press this button to open the ODD tray.

A security cable attaches to this port. The optional security cable anchors your computer to a desk or other large object to deter theft.

ManualsLib.com

Universal Serial Bus ports which comply to the USB 2.0 standard, are provided. The ports with the icon ( ) have USB Sleep and Charge function.

The modem jack allows you to use a modular cable to connect the modem directly to a telephone line. (Depends on the model you purchased.)

Eject

ODD
Button
Indicator
Emergency
Eject Hole

In case of a lightning storm, unplug the modem cable from the telephone jack.

Do not connect the modem to a digital telephone line. A digital line will damage the modem.

S400

The Grand Tour

Operating

Security
Lock
DC in 19V
Jack

Table of Contents

Previous Page
Next Page

Related Manuals for Toshiba PSPCDC-03H00C

Laptop Toshiba P300 User Manual

Notebook computer (199 pages)

Laptop Toshiba P15-S4091 User Manual

P15-s4091 user's guide (240 pages)

Laptop Toshiba P25-S477 User Manual

P25-s477 user's guide (232 pages)

Laptop Toshiba P25-S509 User Manual

P25-s509 user's guide (230 pages)

Laptop Toshiba P30-S6362ST User Manual

P30-s6362st user's guide (230 pages)

Laptop Toshiba P100-ST1072 User Manual

P100-st1072 user's guide (237 pages)

Laptop Toshiba P100-ST7211 User Manual

P100-st7211 user's guide (275 pages)

Laptop Toshiba PSPB3U-01V00L Brochure

Brochure (2 pages)

Laptop Toshiba P205-S6277 User Manual

P205-s6277 user's guide (242 pages)

Laptop Toshiba P300-ST3014 User Manual

P300-st3014 user's guide (231 pages)

Laptop Toshiba P500-ST5801 User Manual

P500-st5801 user's guide (254 pages)

Laptop Toshiba Satellite P30-132 User Manual

Toshiba satellite p30-132: user guide (165 pages)

Laptop Toshiba Satellite P20-8PW User Manual

Toshiba satellite p20-8pw: user guide (142 pages)

Laptop Toshiba PSPA3C-SD402E User Manual

User manual (172 pages)

Laptop Toshiba PSPB0U-00W008 User Manual

User manual (175 pages)

Laptop Toshiba Satellite P500-BT2G22 Resource Manual

Toshiba satellite p500-bt2g22: reference guide (60 pages)

Related Content for Toshiba PSPCDC-03H00C

Satellite L40-C Series Right Side

Toshiba Satellite L40-C Series

Satellite U930 Series Right Side

Toshiba Satellite U930 Series

Tecra A40 C Series Right Side

Toshiba Tecra A40 C Series

Satellite Radius 15 P50W-C Right Side

Toshiba Satellite Radius 15 P50W-C

C70-A Series Right Side

Toshiba C70-A Series

PT930 Right Side

Toshiba PT930

Satellite Pro R50-D Series Right Side

Toshiba Satellite Pro R50-D Series

Satellite Radius 12 P20W-C Right Side

Toshiba Satellite Radius 12 P20W-C

This manual is also suitable for:

Pspccc-06001cP300 seriesP300d series